THIS DOCUMENT IS THE PROPERTY OF KEYSTONE ELECTRONICS CORP. AND SHALL NOT BE REPRODUCED, DISTRIBUTED OR USED AS A BASIS FOR MANUFACTURE WITHOUT PRIOR WRITTEN PERMISSION FROM KEYSTONE ELECTRONICS CORP.

ACTUAL SIZE

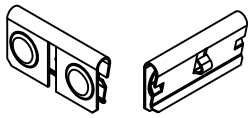

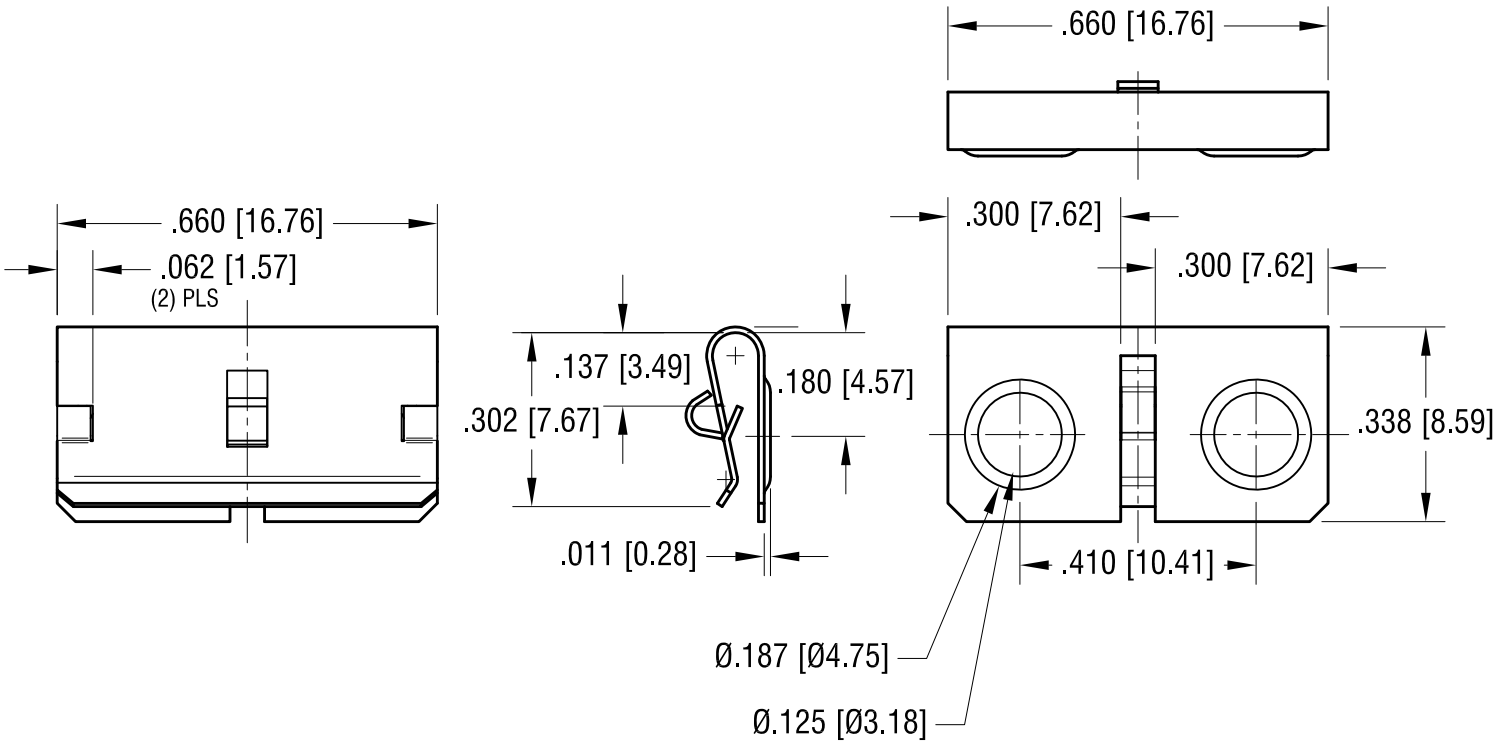


NOTE:

1. DESIGNED TO CLIP OVER PANELS FROM .060 [1.52] THRU .070 [1.78] TH'K.

| DATE | DESCRIPTION | REV. |
|---|---|---|
| 12.28.15 | CHANGE AS PER ECN 15–147<br>MAT'L WAS SPRING STEEL | B |
| 8.02.12 | CHANGE AS PER ECN 12–099 | A |

**KEYSTONE ELECTRONICS CORP.**

www.keyelco.com • ASTORIA, N.Y. 11105-2017 • Tel (718) 956-8900

| | | | |
|---|---|---|---|
| PART NAME | DUAL 'AAA' CONTACT | | |
| MATERIAL | .010 [0.25] TH'K STAINLESS STEEL | | |
| FINISH | NICKEL PLATE | DRN BY BOONE | DATE 5.12.05 |
| | | APP'D LN | SCALE 3X |
| TOLERANCES INCH [MM]<br>DECIMAL ± .010 [± 0.25 ]<br>ANGULAR ± 1°<br>UNLESS OTHERWISE SPECIFIED | CODE C | DWG NO. 294 | |