THIS DOCUMENT IS THE PROPERTY OF KEYSTONE ELECTRONICS CORP. AND SHALL NOT BE REPRODUCED, DISTRIBUTED OR USED AS A BASIS FOR MANUFACTURE WITHOUT PRIOR WRITTEN PERMISSION FROM KEYSTONE ELECTRONICS CORP.

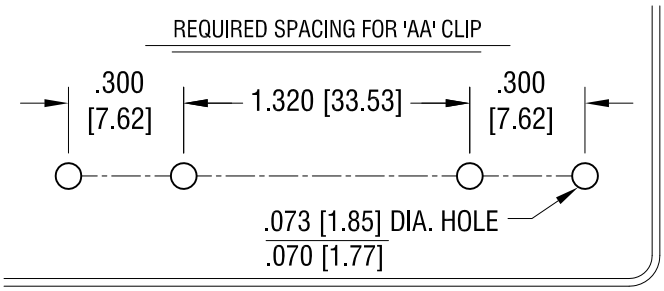

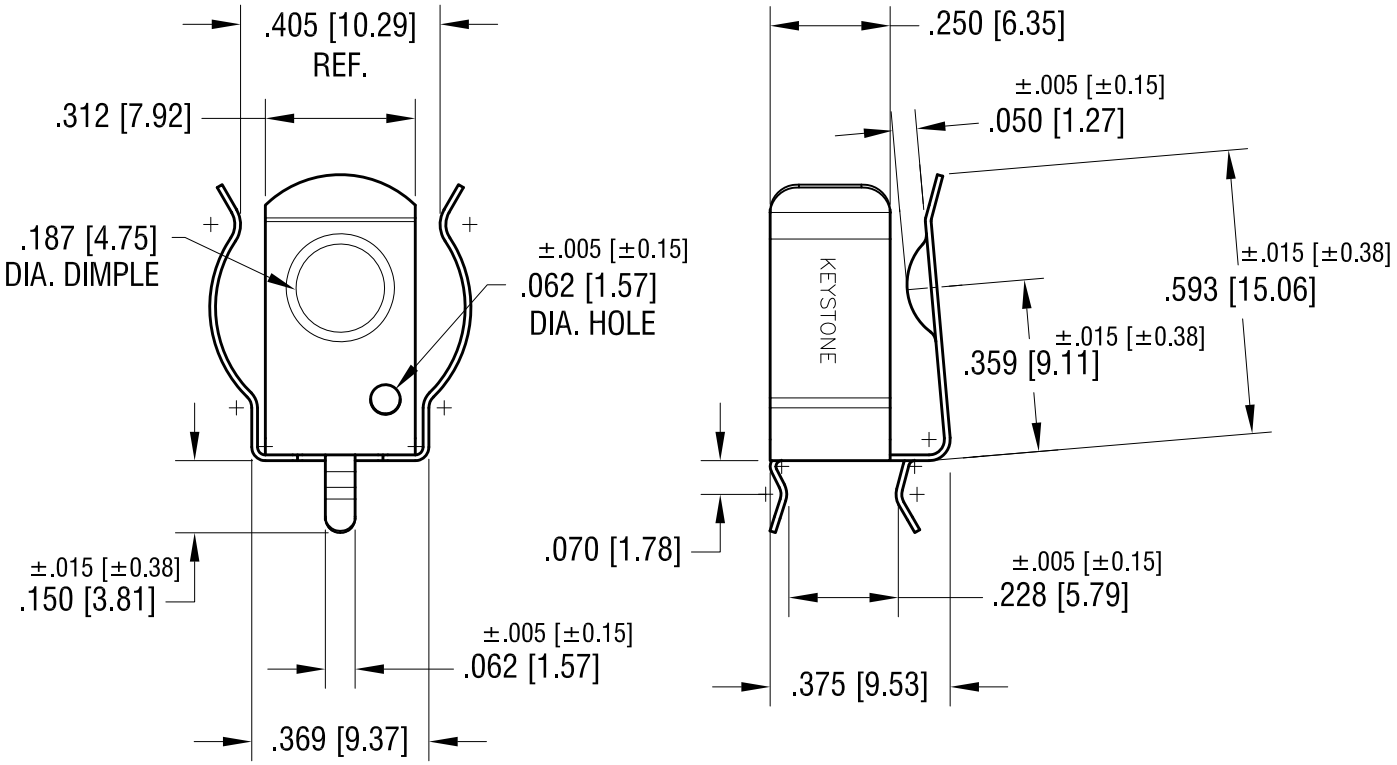

NOTE:

1. HEAT TREAT TO SPRING TEMPER.

DATE	DESCRIPTION	REV.
7.11.14	CHANGE AS PER ECN14-065	L
6.19.06	CHANGE AS PER ECN 06-038	K

KEYSTONE ELECTRONICS CORP.

www.keyelco.com • ASTORIA, N.Y. 11105-2017 • Tel (718) 956-8900

PART NAME	'A' & 'AA' PC BATTERY CLIP		
MATERIAL	.012 [.30] TH'K ANNEALED SPRING STEEL		
FINISH	TIN NICKEL PLATE	DRN BY BOONE	DATE 4.26.89
		APP'D LN	SCALE 2.5X
TOLERANCES INCH [MM] DECIMAL ± .010 [± 0.25] ANGULAR ± 1° UNLESS OTHERWISE SPECIFIED	CODE C	DWG NO. 92	