SGS-THOMSON MICROELECTRONICS

BUV98AV

NPN TRANSISTOR POWER MODULE

- HIGH CURRENT POWER BIPOLAR MODULE
- VERY LOW R_{th} JUNCTION CASE
- SPECIFIED ACCIDENTAL OVERLOAD AREAS
- ISOLATED CASE (2500V RMS)
- EASY TO MOUNT
- LOW INTERNAL PARASITIC INDUCTANCE

INDUSTRIAL APPLICATIONS:

- MOTOR CONTROL
- SMPS & UPS
- WELDING EQUIPMENT

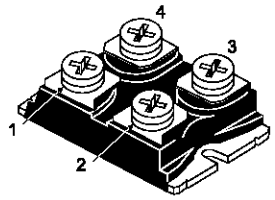

Pin 4 not connected

ISOTOP

INTERNAL SCHEMATIC DIAGRAM

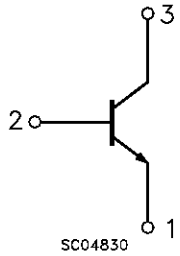

ABSOLUTE MAXIMUM RATINGS

Symbol	Parameter	Value	Unit
V_{CEV}	Collector-Emitter Voltage (V_{BE} = -5 V)	1000	V
$V_{CEO(sus)}$	Collector-Emitter Voltage (I_B = 0)	450	V
V_{EBO}	Emitter-Base Voltage (I_C = 0)	7	V
I_C	Collector Current	30	A
I_{CM}	Collector Peak Current (t_p = 10 ms)	60	A
I_B	Base Current	8	A
I_{BM}	Base Peak Current (t_p = 10 ms)	16	A
P_{tot}	Total Dissipation at T_c = 25 ^oC	150	W
T_{stg}	Storage Temperature	-55 to 150	^oC
T_j	Max. Operating Junction Temperature	150	^oC
V_{ISO}	Insulation Withstand Voltage (AC-RMS)	2500	^oC

THERMAL DATA

$R_{thj-case}$	Thermal Resistance Junction-case	Max	0.83	$^oC/W$
R_{thc-h}	Thermal Resistance Case-heatsink With Conductive Grease Applied	Max	0.05	$^oC/W$

ELECTRICAL CHARACTERISTICS (T_{case} = 25 ^oC unless otherwise specified)

Symbol	Parameter	Test Conditions	Min.	Typ.	Max.	Unit
I_{CER}	Collector Cut-off Current (R_{BE} = 5 Ω)	$V_{CE} = V_{CEV}$ $V_{CE} = V_{CEV}$ T_j = 100 ^oC			1 8	mA mA
I_{CEV}	Collector Cut-off Current (V_{BE} = -5V)	$V_{CE} = V_{CEV}$ $V_{CE} = V_{CEV}$ T_j = 100 ^oC			0.4 4	mA mA
I_{EBO}	Emitter Cut-off Current (I_C = 0)	V_{EB} = 5 V			2	mA
$V_{CEO(SUS)}$*	Collector-Emitter Sustaining Voltage	I_C = 0.2 A L = 25 mH V_{clamp} = 450 V	450			V
h_{FE}*	DC Current Gain	I_C = 24 A V_{CE} = 5 V		9		
$V_{CE(sat)}$*	Collector-Emitter Saturation Voltage	I_C = 16 A I_B = 3.2 A I_C = 24 A I_B = 5 A			1.5 5	V V
$V_{BE(sat)}$*	Base-Emitter Saturation Voltage	I_C = 16 A I_B = 3.2 A			1.6	V
di_C/dt	Rate of Rise of On-state Collector	V_{CC} = 300 V R_C = 0 t_p = 3 µs I_{B1} = 6 A T_j = 100 ^oC	100			A/µs
V_{CE}(3 µs)	Collector-Emitter Dynamic Voltage	V_{CC} = 300 V R_C = 15 Ω I_{B1} = 6 A T_j = 100 ^oC			8	V
V_{CE}(5 µs)	Collector-Emitter Dynamic Voltage	V_{CC} = 300 V R_C = 15 Ω I_{B1} = 6 A T_j = 100 ^oC			4	V
t_s t_f	Storage Time Fall Time	I_C = 16 A V_{CC} = 50 V V_{BB} = -5 V L_B = 1.5 µH V_{clamp} = 300 V I_{B1} = 3.2 A L = 750 µH T_j = 100 ^oC			5 0.4	µs µs
V_{CEW}	Maximum Collector Emitter Voltage Without Snubber	I_{CWoff} = 30 A I_{B1} = 6 A V_{BB} = -5 V V_{CC} = 50 V L = 750 µH L_B = 15 µH T_j = 125 ^oC	350			V

∗ Pulsed: Pulse duration = 300 µs, duty cycle 1.5 %

Safe Operating Areas

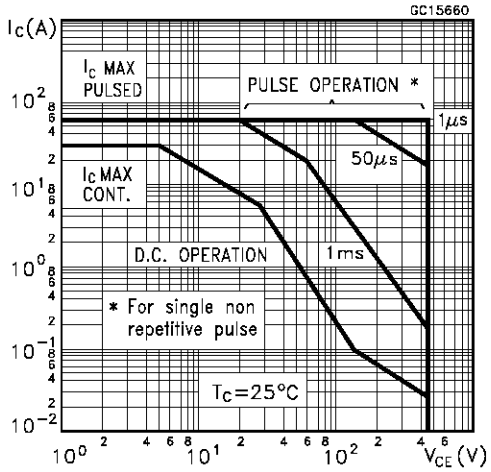

Thermal Impedance

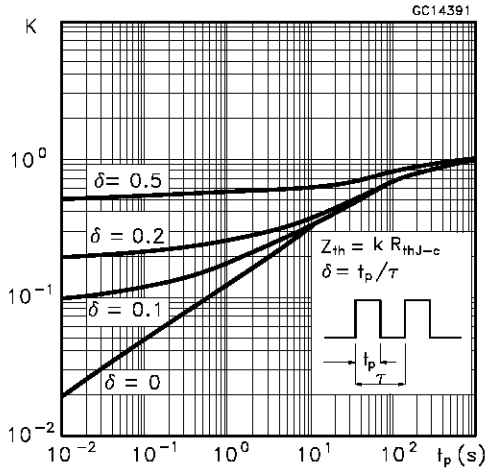

Derating Curve

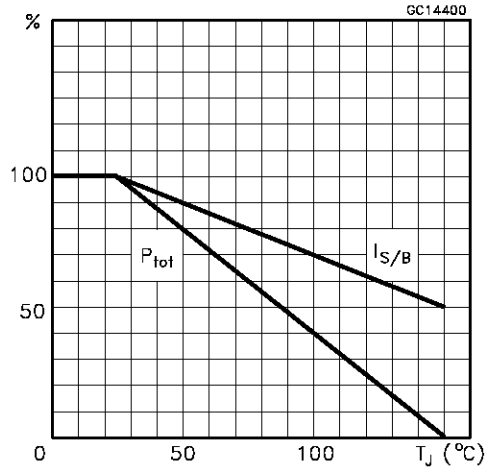

Collector-emitter Voltage Versus base-emitter Resistance

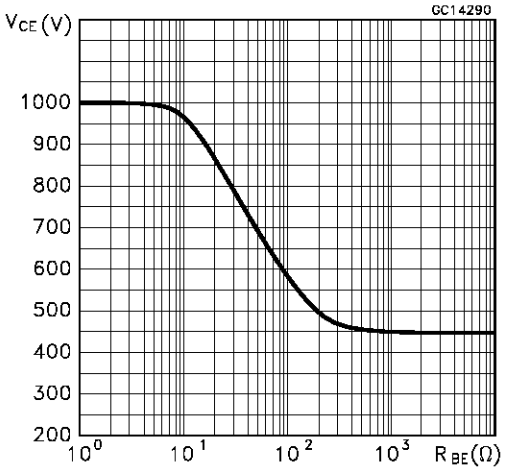

Collector Emitter Saturation Voltage

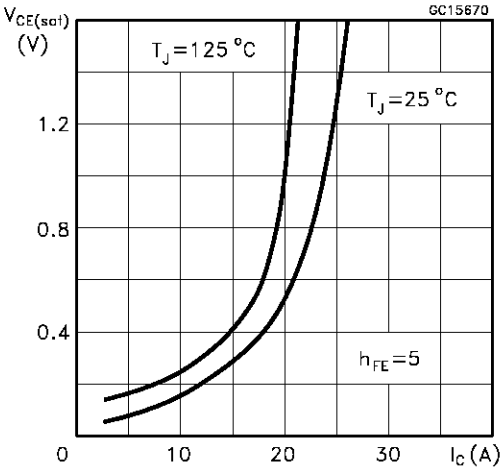

Base-Emitter Saturation Voltage

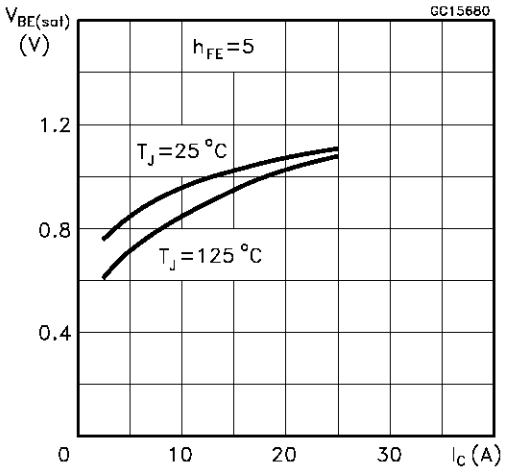

Reverse Biased SOA

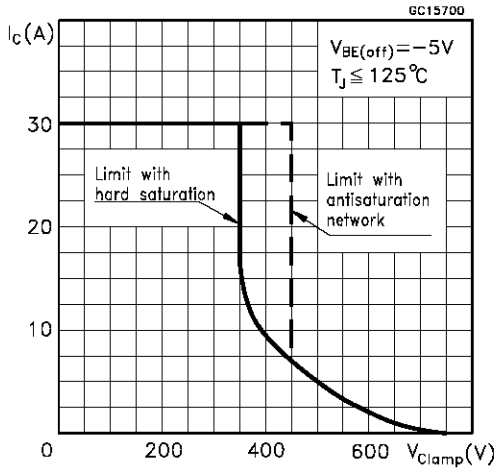

Foward Biased SOA

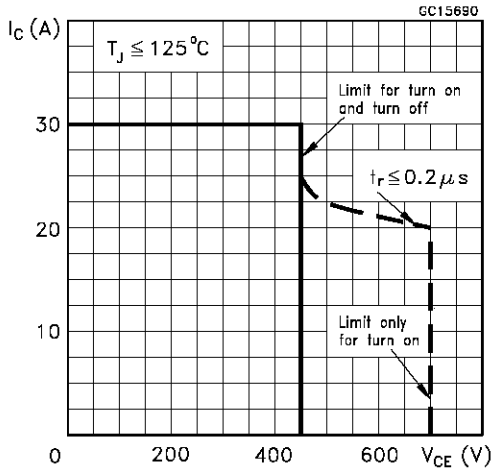

Reverse Biased AOA

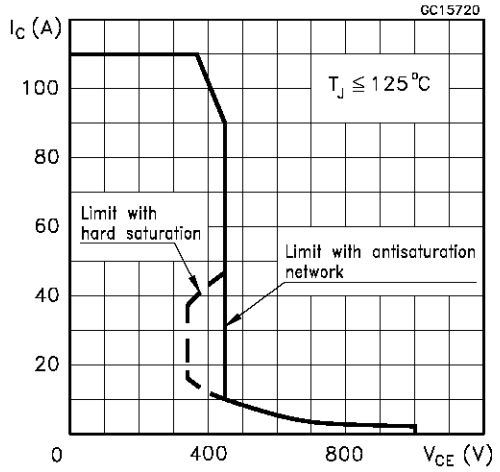

Forward Biased AOA

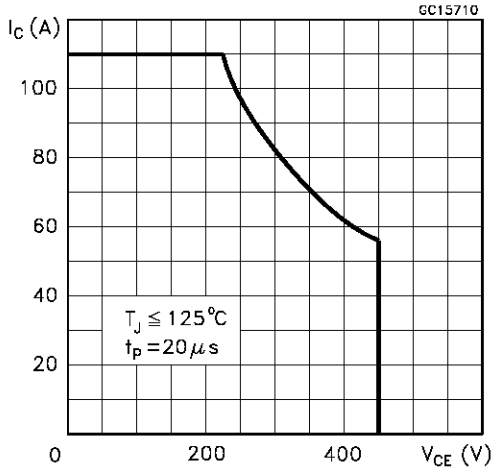

Switching Times Inductive Load

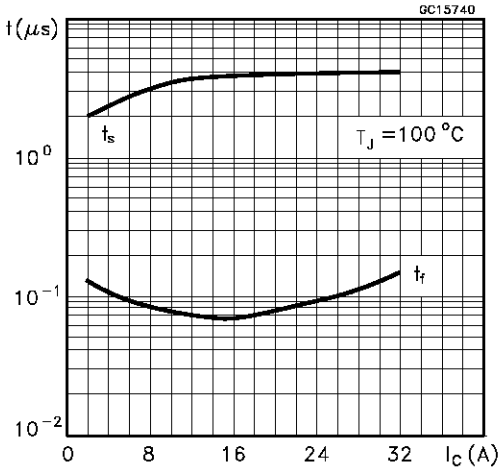

Switching Times Inductive Load Versus Temperature

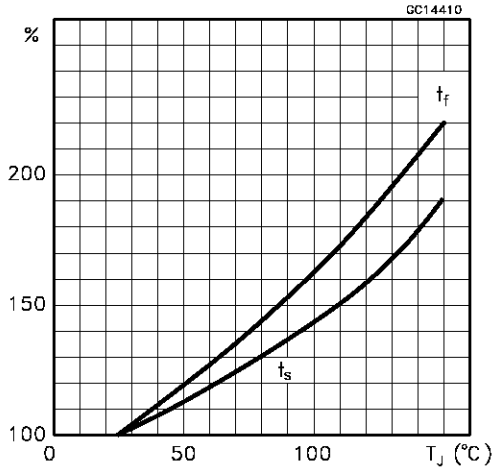

Dc Current Gain

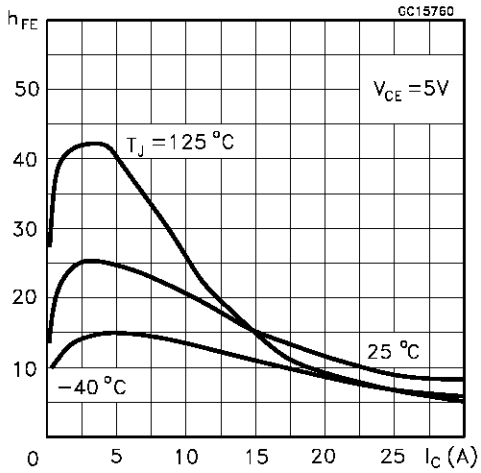

Turn-on Switching Test Circuit

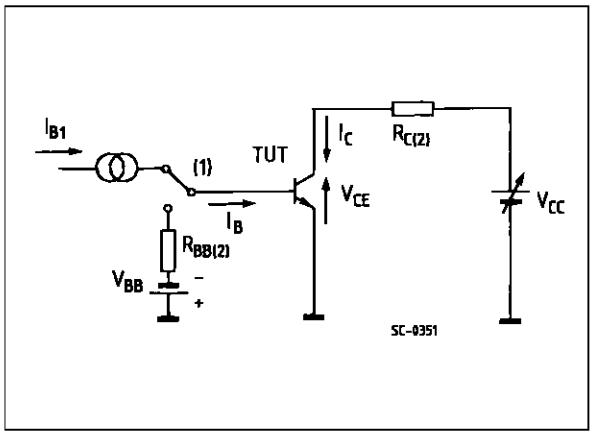

(1) Fast electronics switch (2) Non-inductive load

Turn-on Switching Waveforms

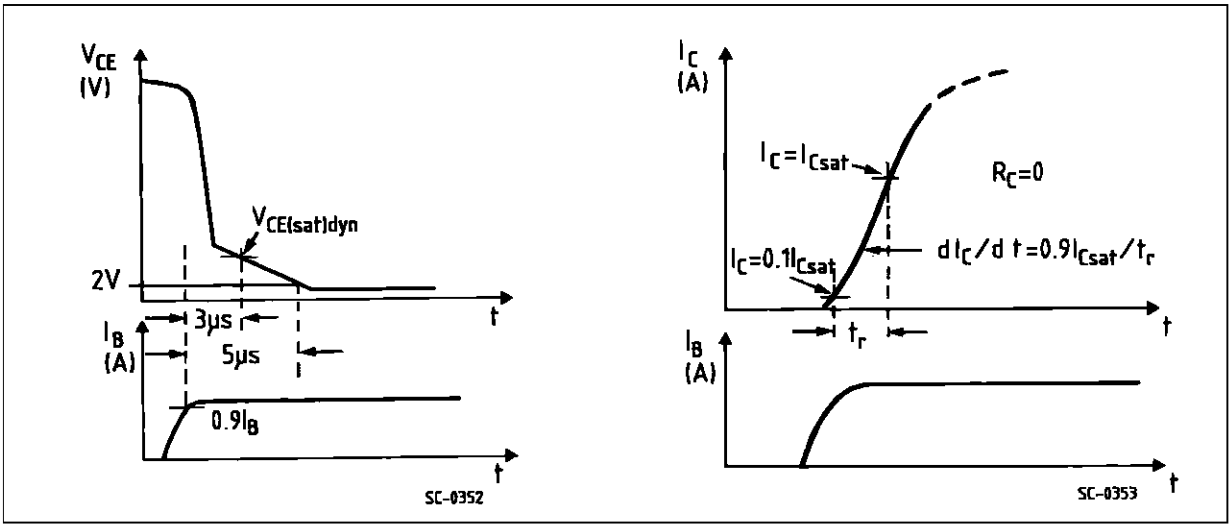

Turn-off Switching Test Circuit

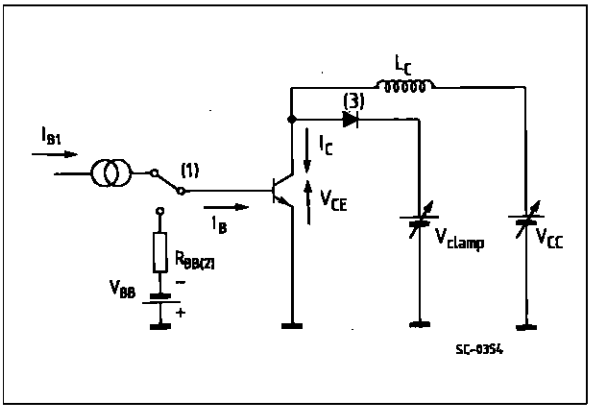

(1) Fast electronic switch (2) Non-inductive load
(3) Fast recovery rectifier

Turn-off Switching Waveforms

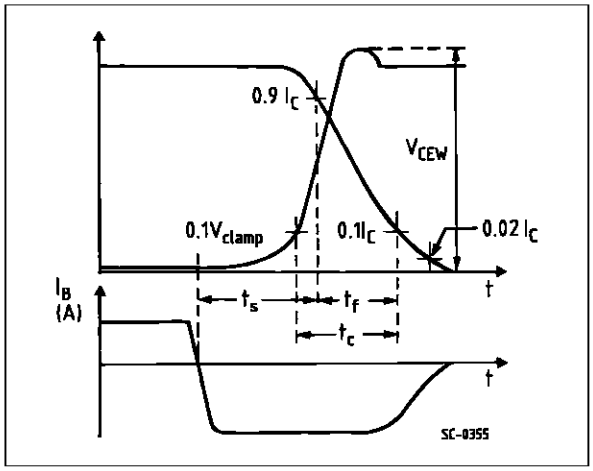

ISOTOP MECHANICAL DATA

DIM.	mm			inch		
	MIN.	TYP.	MAX.	MIN.	TYP.	MAX.
A	11.8		12.2	0.466		0.480
B	8.9		9.1	0.350		0.358
C	1.95		2.05	0.076		0.080
D	0.75		0.85	0.029		0.033
E	12.6		12.8	0.496		0.503
F	25.15		25.5	0.990		1.003
G	31.5		31.7	1.240		1.248
H	4			0.157		
J	4.1		4.3	0.161		0.169
K	14.9		15.1	0.586		0.594
L	30.1		30.3	1.185		1.193
M	37.8		38.2	1.488		1.503
N	4			0.157		
O	7.8		8.2	0.307		0.322

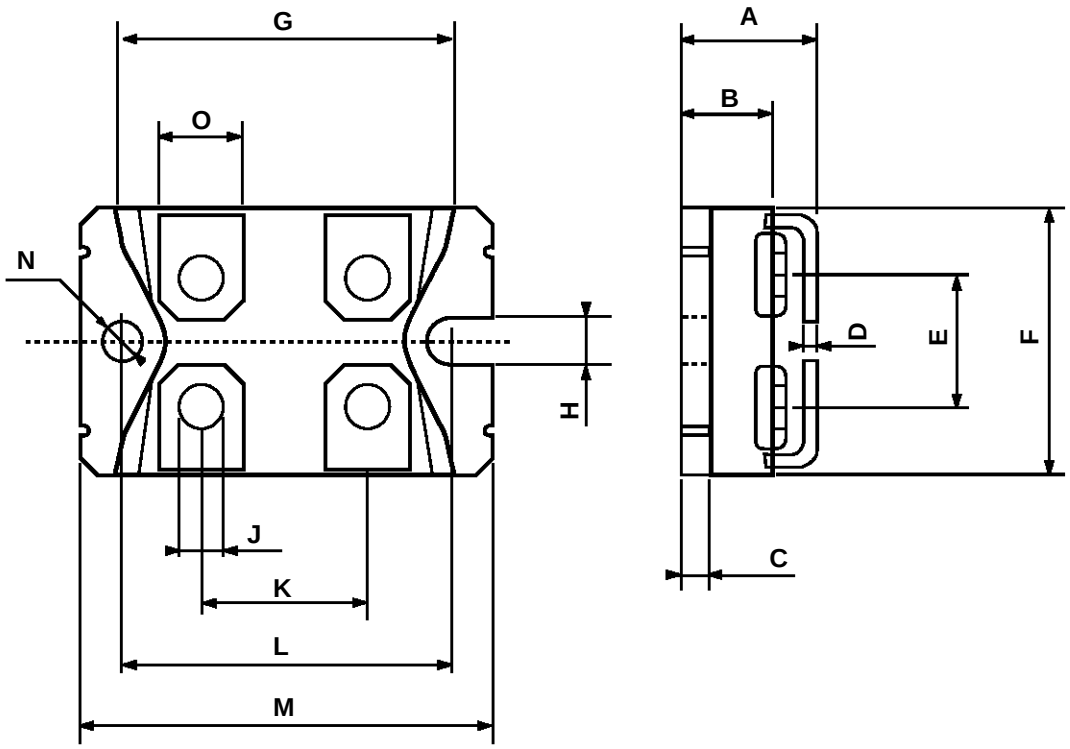

Information furnished is believed to be accurate and reliable. However, SGS-THOMSON Microelectronics assumes no responsability for the consequences of use of such information nor for any infringement of patents or other rights of third parties which may results from its use. No license is granted by implication or otherwise under any patent or patent rights of SGS-THOMSON Microelectronics. Specifications mentioned in this publication are subject to change without notice. This publication supersedes and replaces all information previously supplied.
SGS-THOMSON Microelectronics products are not authorized for use as critical components in life support devices or systems without express written approval of SGS-THOMSON Microelectonics.

© 1997 SGS-THOMSON Microelectronics - Printed in Italy - All Rights Reserved

SGS-THOMSON Microelectronics GROUP OF COMPANIES
Australia - Brazil - Canada - China - France - Germany - Hong Kong - Italy - Japan - Korea - Malaysia - Malta - Morocco - The Netherlands - Singapore - Spain - Sweden - Switzerland - Taiwan - Thailand - United Kingdom - U.S.A
. . .