TELEVISION SIGNAL PROCESSING CIRCUIT

The TCA270S is a monolithic integrated circuit combining the following functions:
- synchronous demodulator
- video amplifier with buffer output stages
- noise inverters
- A.G.C. detector with output stages for n-p-n tuner and i.f. amplifier
- A.F.C. demodulator with buffer output stage

Opposite polarity video signals are available from emitter followers, the negative-going signal being matched to integrated circuit type TBA920.

QUICK REFERENCE DATA				
Supply voltage	V_{3-16}	nom.	12	V
Ambient temperature	T_{amb}	typ.	25	°C
Frequency	f	typ.	38,9	MHz
Supply current	I_3	typ.	47	mA
Video output voltage (peak value)	V_{9-16M}	typ.	3	V
Bandwidth (3 dB)	B	typ.	5	MHz
Intermodulation products (blue colour bar)				
1,1 MHz with respect to B-W level		typ.	−60	dB
3,3 MHz with respect to B-W level		typ.	−67	dB
A.F.C. output control voltage swing (peak-to-peak value)	$V_{11-16(p-p)}$	>	10	V
A.G.C. control current for n-p-n i.f. (pin 4)	I_4	>	10	mA
A.G.C. control current for tuner (pin 5)	I_5	>	10	mA

PACKAGE OUTLINES

TCA270S : 16-lead DIL; plastic (SOT-38).
TCA270SQ: 16-lead QIL; plastic (SOT-58).

CIRCUIT DIAGRAM

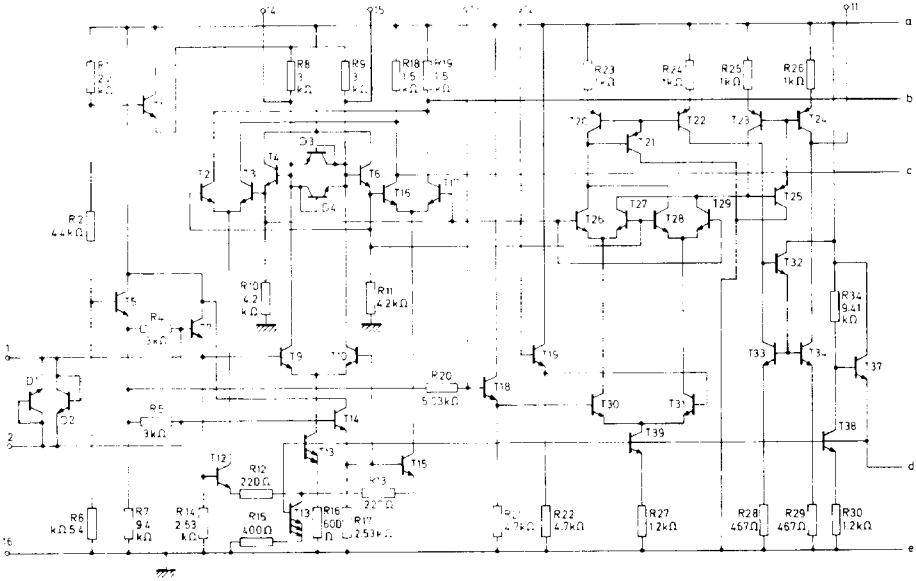

CIRCUIT DIAGRAM (continued)

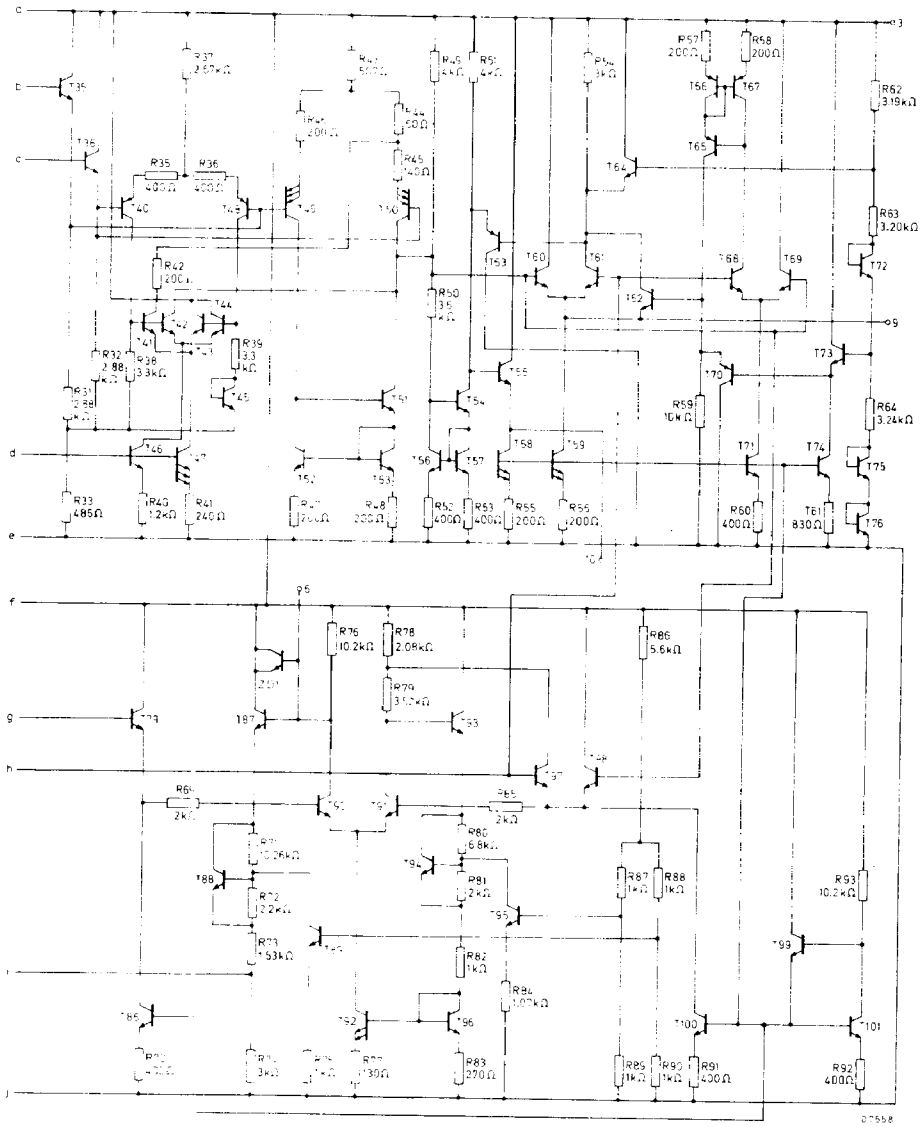

RATINGS Limiting values in accordance with the Absolute Maximum System (IEC134)

Supply voltage during switch on ($t \leq 10$ s)	V_{3-16}	max.	18	V
Power dissipation	P_{tot}	max.	1	W
Temperatures				
Storage temperature	T_{stg}		−55 to +125	°C
Operating ambient temperature	T_{amb}		−25 to +55	°C

CHARACTERISTICS

Supply voltage range	V_{3-16}	typ.	12,0	V
			10,2 to 13,8	V
Supply current range	I_3	typ.	47	mA
			33 to 62	mA
D.C. output voltage (zero signal; pin 9)	V_{9-16}	typ.	6	V
D.C. output voltage (zero signal; pin 10)	V_{10-16}	typ.	6	V
D.C. output voltage at start of a.g.c. (pin 9)	V_{9-16}	typ.	3	V
Unbalanced r.m.s. input voltage for a.g.c.	$V_{i(rms)}$	typ.	70	mV
			50 to 100	mV
Input resistance at pin 1	R_{1-16}	typ.	3	kΩ
Input resistance at pin 2	R_{2-16}	typ.	3	kΩ
Bandwidth (3 dB) of video output	B	typ.	5	MHz
Differential gain		<	10	% [1]
Differential phase		<	10	° [1]
Intermodulation products (blue colour bar)				
1,1 MHz		typ.	−60	dB
3,3 MHz		typ.	−67	dB
Carrier frequency rejection at pins 9, 10 and 11		>	40	dB
Twice carrier frequency rejection at pins 9, 10 and 11		>	40	dB

[1]) CCIR system of modulation, peak of white signal = 10% of carrier.

CHARACTERISTICS (continued)

A.G.C. circuit

Saturation voltage of tuner control at 10 mA (pin 4)	$V_{4-13sat}$	<	0,3	V
Saturation voltage of i.f. control at 10 mA (pin 5)	$V_{5-13sat}$	0,7 to	1,2	V
Breakdown voltage at 1 mA (pins 4 and 5)	$V_{(BR)4-13}$ / $V_{(BR)5-13}$	>	14	V
Control current at pins 4 and 5	I_4; I_5	>	10	mA
Signal expansion for complete a.g.c.		<	0,5	dB
A.G.C. gating (optional) by negative line flyback pulse; input voltage (peak-to-peak value)	$V_{i(p-p)}$	>	2	V
		<	supply voltage	
input resistance	R_i	typ.	1,8	kΩ
Current ratio of unsaturated outputs (pins 4 and 5) at I_5 = 1 mA	$\frac{I_4}{I_5}$	>	6	

A.F.C. circuit

Output control voltage swing (peak-to-peak value)	$V_{11-16(p-p)}$	>	10	V
Change of frequency for complete output voltage swing		<	400	kHz
Change of frequency to maintain peak output voltage		>	±1	MHz

Noise inverters [1])

Negative-going noise pulses in pin 9 inversion threshold		typ.	2,55	V
Positive-going noise pulses in pin 9 inversion threshold		typ.	6,6	V

[1]) Noise pulses are inverted to a point near black level.

APPLICATION INFORMATION

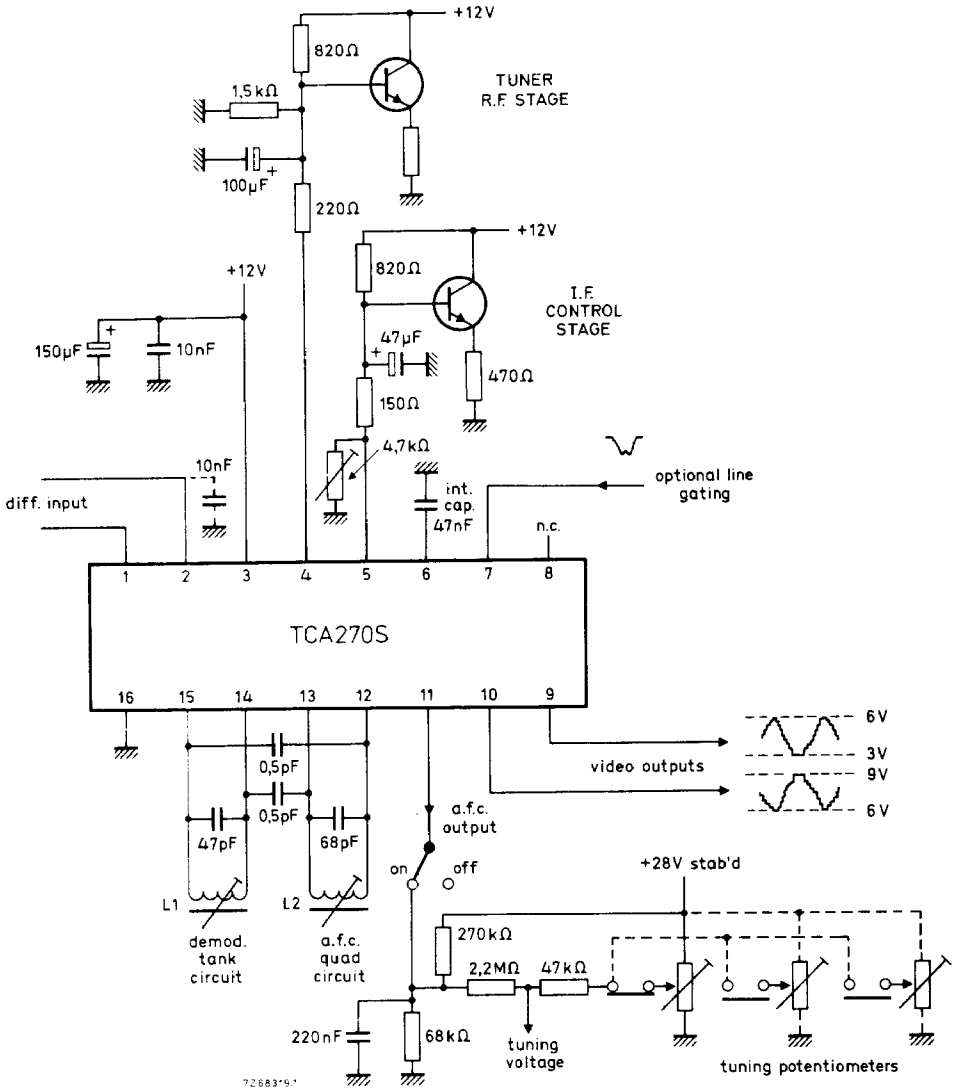

Unloaded Q of L1 and L2 must be > 50.

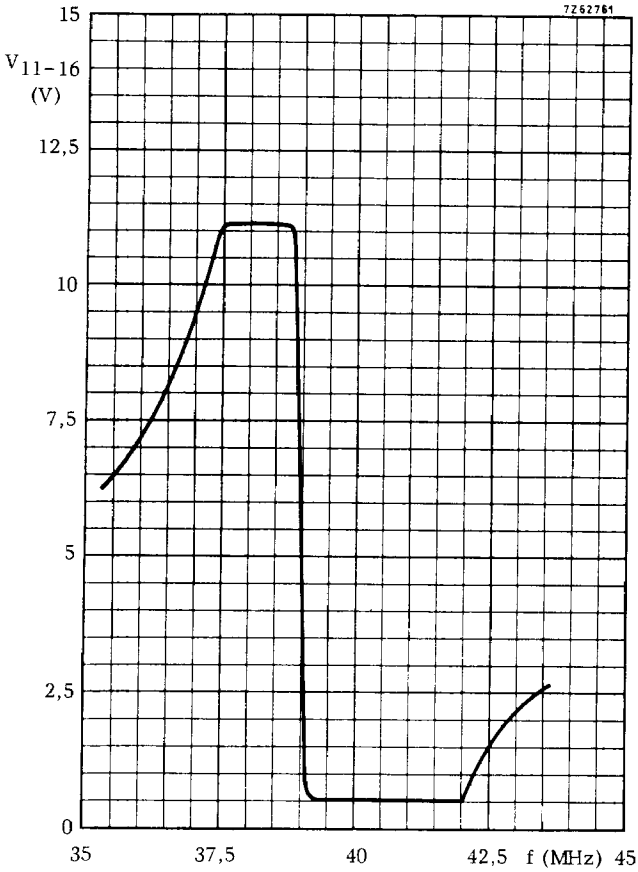

A.F.C. output voltage versus frequency

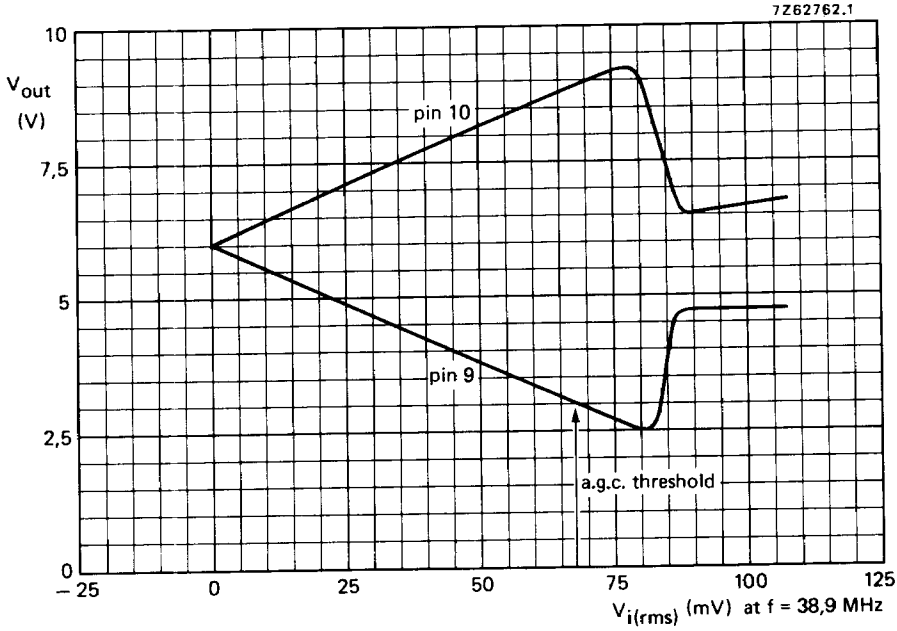
7Z62762.1
10
V_{out}
(V)
7,5
5
2,5
0
pin 10
pin 9
a.g.c. threshold
– 25
0
25
50
75
100
125
$V_{i(rms)}$ (mV) at f = 38,9 MHz

This datasheet has been downloaded from:

www.DatasheetCatalog.com

Datasheets for electronic components.