Copyright © 1997, Power Innovations Limited, UK JUNE 1984 - REVISED SEPTEMBER 1997

- **$V_{(BR)}$ 1200 to 1500 V**
- **I_H > 175 mA**
- **I_{GT} < 2 mA**

description

This product is intended for use as a T8/T12 fluorescent tube starter switch on 200-240 V a.c. supplies with tube sizes up to 5ft with leading and lagging ballast circuits.

TO-220 PACKAGE
(TOP VIEW)

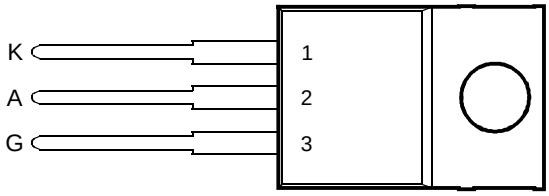

Pin 2 is in electrical contact with the mounting base.

MDC1ACA

absolute maximum ratings at 25°C case temperature (unless otherwise noted)

RATING		SYMBOL	VALUE	UNIT
Crest working off-state voltage (Full wave rectified 50 Hz a.c.)		V_{DWM}	375	V
Peak reverse gate voltage		V_{RGM}	6	V
On-state current	— continuous	I_T	1.5	A
	— repetitive peak	I_{TRM}	2	
	— non-repetitive peak	I_{TSM}	10	
Peak gate current		I_{GRM}	0.5	A
Average gate power		$P_{G(av)}$	0.3	W
Operating case temperature range		T_C	-5 to +85	°C
Storage temperature range		T_{stg}	-10 to +110	°C
Lead temperature during soldering 1.6 mm from the case for 10 seconds		T_{lead}	230	°C

electrical characteristics at 25°C case temperature (unless otherwise noted)

PARAMETER		TEST CONDITIONS		MIN	TYP	MAX	UNIT
I_D	Off-state current	$V_D = V_{DWM}$	T_j = 65°C			1	mA
V_T	On-state voltage	I_T = 2 A				3.1	V
$V_{(BR)}$	Clamping voltage	I_{BR} = 5 mA	t_p < 200 µs, 2% duty cycle	1200		1500	V
I_H	Holding current	See application circuit		175			mA
I_{GTM}	Peak gate trigger current	V_{AA} = 10 V	R_L = 10 Ω			2	mA
V_{GTM}	Peak gate trigger voltage	V_{AA} = 10 V	R_L = 10 Ω			3	V

thermal characteristics

PARAMETER		MIN	TYP	MAX	UNIT
$R_{\theta JA}$	Junction to free air thermal resistance			62.5	°C/W
$R_{\theta JC}$	Junction to case thermal resistance			3.5	°C/W

PRODUCT INFORMATION

Information is current as of publication date. Products conform to specifications in accordance with the terms of Power Innovations standard warranty. Production processing does not necessarily include testing of all parameters.

Power INNOVATIONS

applications data

The conventional method of starting fluorescent tubes employs the use of an electromechanical canister. This consists of a bimetallic strip which opens as it cools and in conjunction with the ballast inductor, provides the tube striking voltage. However, the random nature of the pulsing results in repeated striking attempts and degradation of both the tube and starter. The tube degradation is illustrated by its progressively blackening ends and ultimately required tube replacement.

The Y1112, “Fluoractor®”, has been specifically introduced for use in electronic starters. This unique device offers the lighting industry an opportunity to develop electronic starters small enough to be retrofit replacements for the established electromechanical canisters. Its double thyristor structure with integrated zener clamp diode and current mirror provides the technology for a starter with enhanced features such as controlled flicker free start up, automatic tube shutdown at end of tube life and reduced degradation of tube ends leading to extended life. The increased functionality, lifetime and reliability of these starters has led in some cases to them being embodied in the ballast itself, a development not feasible with the old electromechanical canisters.

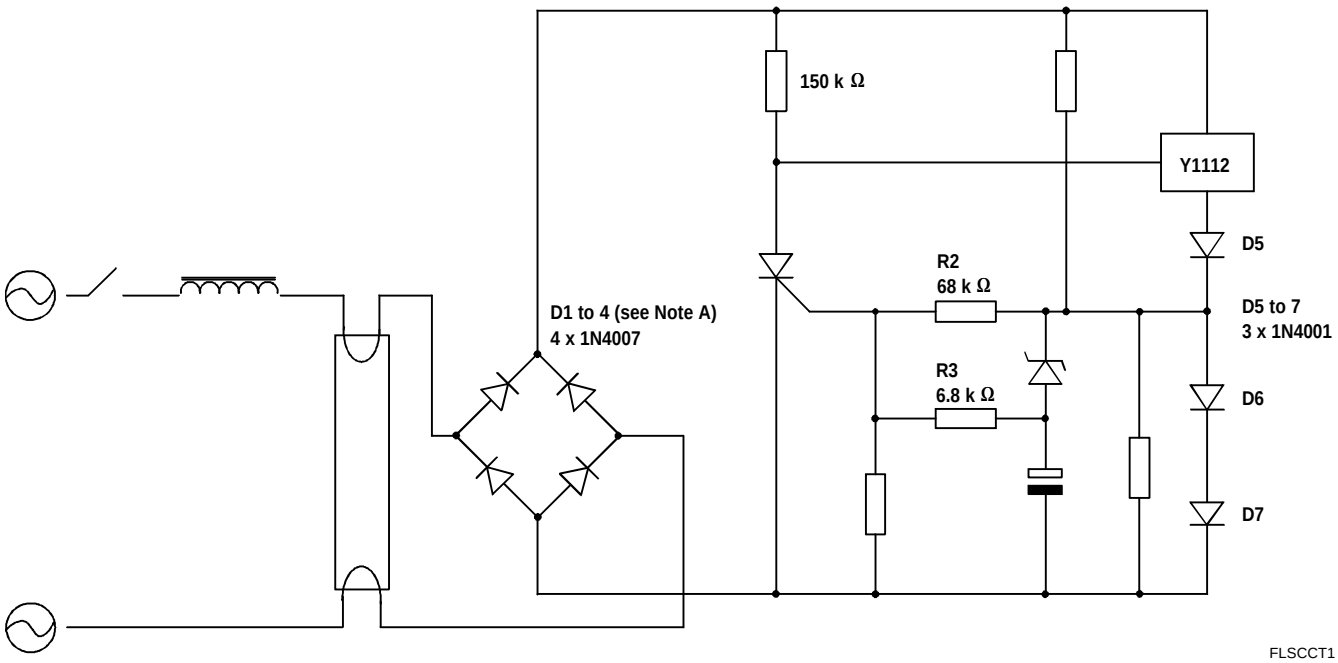

Figure 1. Two terminal starter circuit

NOTE 1: These rectifiers need to be voltage selected for $V_R \geq V_{(BR)max} + 150$ V

MECHANICAL DATA

TO-220
3-pin plastic flange-mount package

This single-in-line package consists of a circuit mounted on a lead frame and encapsulated within a plastic compound. The compound will withstand soldering temperature with no deformation, and circuit performance characteristics will remain stable when operated in high humidity conditions. Leads require no additional cleaning or processing when used in soldered assembly.

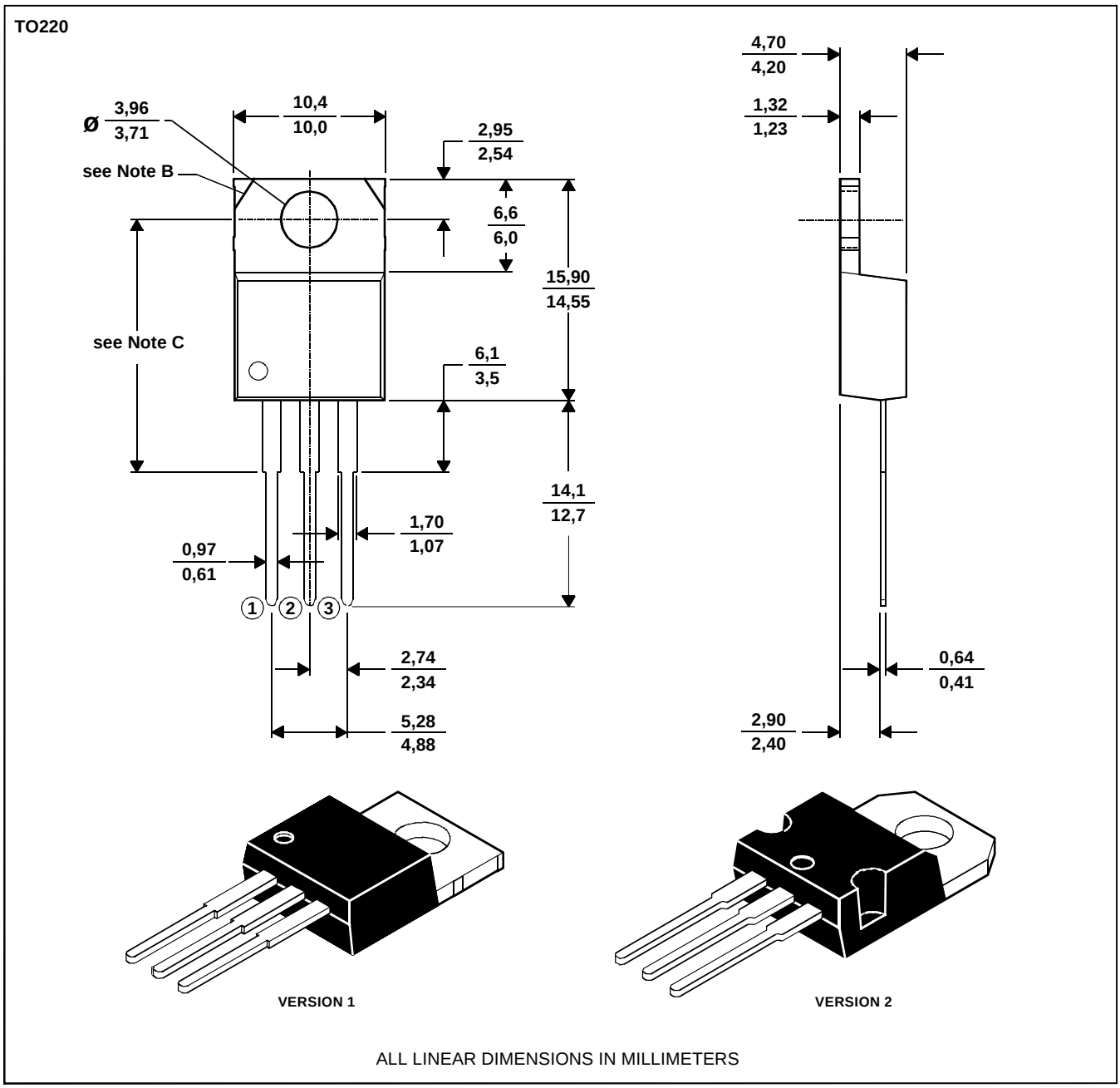

NOTES: A. The centre pin is in electrical contact with the mounting tab.
B. Mounting tab corner profile according to package version.
C. Typical fixing hole centre stand off height according to package version.
Version 1, 18.0 mm. Version 2, 17.6 mm.

MDXXBE

IMPORTANT NOTICE

Power Innovations Limited (PI) reserves the right to make changes to its products or to discontinue any semiconductor product or service without notice, and advises its customers to verify, before placing orders, that the information being relied on is current.

PI warrants performance of its semiconductor products to the specifications applicable at the time of sale in accordance with PI's standard warranty. Testing and other quality control techniques are utilized to the extent PI deems necessary to support this warranty. Specific testing of all parameters of each device is not necessarily performed, except as mandated by government requirements.

PI accepts no liability for applications assistance, customer product design, software performance, or infringement of patents or services described herein. Nor is any license, either express or implied, granted under any patent right, copyright, design right, or other intellectual property right of PI covering or relating to any combination, machine, or process in which such semiconductor products or services might be or are used.

PI SEMICONDUCTOR PRODUCTS ARE NOT DESIGNED, INTENDED, AUTHORIZED, OR WARRANTED TO BE SUITABLE FOR USE IN LIFE-SUPPORT APPLICATIONS, DEVICES OR SYSTEMS.

Copyright © 1997, Power Innovations Limited